2015000196Z

(2015)国认监认字(059)号

中国认可
国际互认
检测
TESTING
CNAS L0223

XIHARI

No. 170065J

检 验 报 告

Test Report

试 品 型 号: TYPE	BRFDLW-126/630-4
试 品 名 称: DESIGNATION	复合油纸绝缘电容型变压器套管 Composite Oiled Paper Insulation Transformer Bushing for Capacitance
委 托 单 位: CLIENT	江苏神马电力股份有限公司如皋分公司 Jiangsu Shemar (Rugao) Electric Co., Ltd.
制 造 单 位: MANUFACTUER	江苏神马电力股份有限公司如皋分公司 Jiangsu Shemar (Rugao) Electric Co., Ltd.
检 验 类 别: TEST CLASSIFICATION	型式试验 Type Tests

西安高压电器研究院有限责任公司

XI'AN HIGH VOLTAGE APPARATUS RESEARCH INSTITUTE CO., LTD.

国家绝缘子避雷器质量监督检验中心

NATIONAL QUALITY SUPERVISION & INSPECTION CENTER
FOR INSULATOR & SURGE ARRESTER

注意事项
REMARK

1、检验报告无“检验报告专用章”及封印无效。The test report will be invalid without the “Special stamp for test repot” or the seal.

2、仅下述情况不需要本实验室的书面许可：完整的复制本报告；或同时复制结论页及概述页。While without the laboratory permission in writing form, it’s only allowed to completely copy this report;or copy these pages--the test conclusion pages and summary pages in the same time.

3、检验报告无编写、校核、批准人签字无效。The test report will be invalid without the original signature of edit by, checked by and approval by.

4、检验报告涂改无效。The test report will be invalid with alter of any character or data.

5、对检验报告若有异议，应于收到报告之日起二十五天内向本实验室提出。Any dissensions to this test report should be formally submitted to the laboratory within 25 days from the receiving date.

6、本检验报告仅适用于被试品，任何采用相同设计的同型号产品与被试品的一致性由制造单位负责。This test report is only for the testedobject. It’s manufacturer’s duty to keep the uniformity of any products of the same type using the same design and the test object.

7、本检验报告的产品和相关内容可能涉及专利,本实验室不承担识别这些专利以及由此引起的任何责任。Tested object, report and relevant contents may relate to patent. The laboratory is not responsible for identifying these patents and any others.

8、本检验报告封面、目录、概述及检验结论页面为防伪页。The page ‘cover’, ‘contents’, ‘summary’and ‘test conclusion’contain the anti-fake label.

地址：西安高压电器研究院有限责任公司陕西省西安市西二环北段 18 号
Address: Xi’an High Voltage Apparatus Research Institute Co.,Ltd. No.18 North Section of Xi’erhuan, Shaanxi, China
邮政编码 Zip：710077
电话 Tel.：(029)84225675 (029)84221456
传真 Fax.：(029)84225680
电子邮箱 E-mail: lab@xihari.com

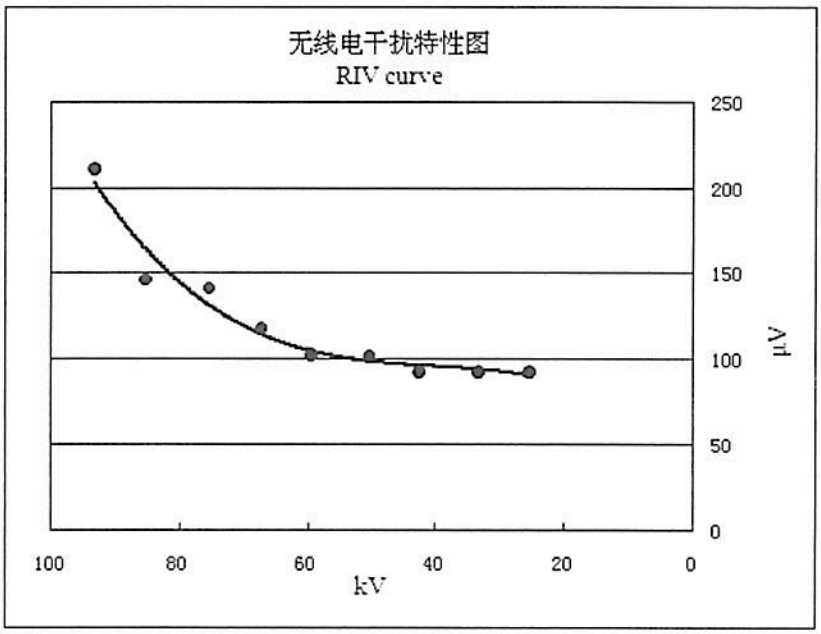

RIVCV170065J-001

温升试验（型式）
Temperature Rise Test (Type Test)

试验日期/Date: 2017-03-07

实测温升数据
Measured data of temperature-rise tests

测量部位编号 No.	测量部位名称 Measuring position	实测温升 Temperature rise K	允许温升值 Specifications K
1	铜排一米处/One meter from the copper line	15.0	/
2	接线端子/The connecting terminal	18.2	≤75
3	固定连接/The fixed connection	17.0	≤75
4	固定连接/The fixed connection	19.1	≤75
5	接线帽/The wiring cap	16.1	/
6	油枕/The oil pillow	13.8	/
7	硅橡胶件/The silicon rubber	4.0	/
8	法兰件/The flange	28.3	/
9	螺母/The screw nut	46.7	≤70
10	固定连接/The fixed connection	50.1	≤75
11	接线端子/The connecting terminal	51.6	≤75
12	铜排一米处/One meter from the copper line	49.6	/
13	变压器油/The transformer oil	60.9	60±2

环境温度为13.5℃，施加电流1000A。

Ambient air temperature: 13.5℃. The current is 1000A.

测量部位编号及热电偶测量部位见示意图。

Measuring position Numbers and measuring position of the thermo cell see diagram.

温升试验（型式）
Temperature Rise Test (Type Test)

测量点示意图/Measuring position diagram

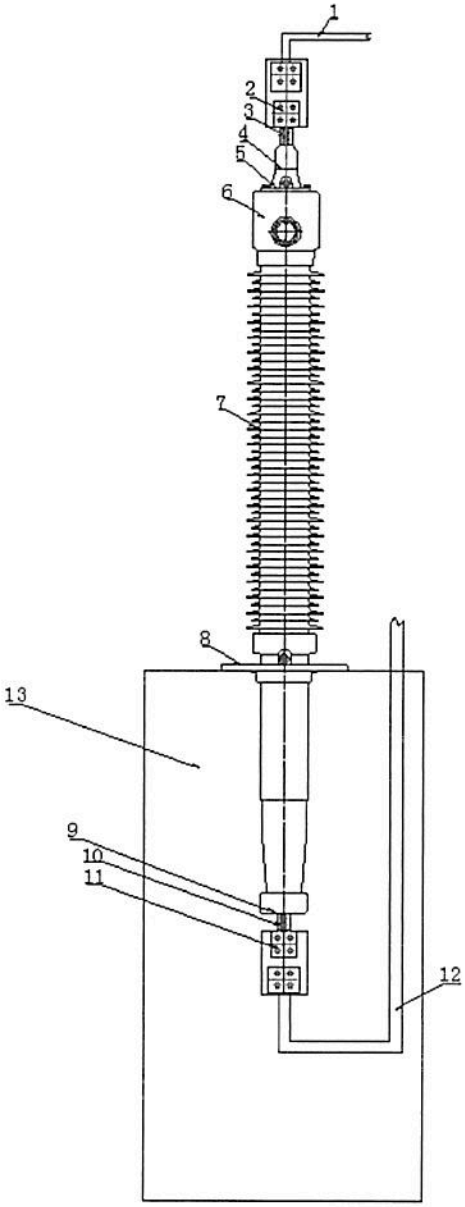

温升测量点示意图
(Measuring position diagram of the temperature-rise test)

温升试验（型式）
Temperature Rise Test (Type Test)

温升试验整体 Photograph 1

热短时电流耐受试验（型式）
Verification of Thermal Short-time Current Withstand (Type Test)

根据GB/T4109-2008第8.8条的规定，套管耐受I_{th}的能力用下式计算证明，如果导体的最终温度θ_f不超过180℃，则认为套管能耐受I_{th}标准值。热短时电流耐受试验可以免做。

According to GB/T4109-2008, the ability of the bushing to withstand value I_{th} can be demonstrated by the following calculation, if θ_f does not exceed 180℃ the bushing shall be considered to be able to withstand value of I_{th}.

$$\theta_f=\theta_0+\alpha\times I_{th}^2\times t_{th}/(S_t\times S_e)$$

式中/Where: θ_f—导体的最终温度/the final temperature of the conductor, ℃

θ_0—在环境温度40℃下载I_r连续运行时的导体温度/the temperature of the conductor under continuous operation with Ir at an ambient temperature of 40℃, ℃;

α— 铜为/for copper is 0.8 $(K/s)/(kA/cm^2)^2$;

I_{th}—标准规定的热短时电流/the standard value of current as specified, kA;

t_{th}—标准规定的热短时电流的持续时间/the rate duration as specified, s;

S_t—与I_r相适应的总截面积/the total cross-section in square centimeters corresponding to I_r, cm^2;

S_e—用于计算集肤效应的等效截面积/the equivalent cross-section in square centimeters taking account of skin effect, cm^2。

$S_t=12.56cm^2$;

$S_e=10.27cm^2$;

θ_0（max）=61 ℃;

I_{th}=25kA;

t_{th}=2s;

$\theta_f=61+0.8\times25^2\times2\div(12.56\times10.27)=68.8$(℃);

因为$\theta_f<180$℃，所以热短时电流耐受试验免做。
The thermal short-time current withstand test can be omitted.

注：以上计算过程均由客户提供。
Note: the above calculation is provided by customer.

悬臂负荷耐受试验（型式）
Cantilever Load Withstand Test (Type Test)

试验日期/Date: 2017-03-08

试验时套管内部充0.20MPa（表压）的SF_6气体、套管中心导管内充0.20MPa（表压）的SF_6气体。
The pressure of SF_6 is 0.20MPa.

由于产品处于水平放置，考虑产品自身重量的影响，故负载由原先3150N 调整为3500N。

样品编号 No.	施加负荷 Load applied N	持续时间 Duration s	样品状况 Result
1	3500	60	未损坏 No damage
规定值 Specifications	3500	60	不应损坏 No damage

符合检验依据规定，合格。
The result met test standard and the technical specifications.

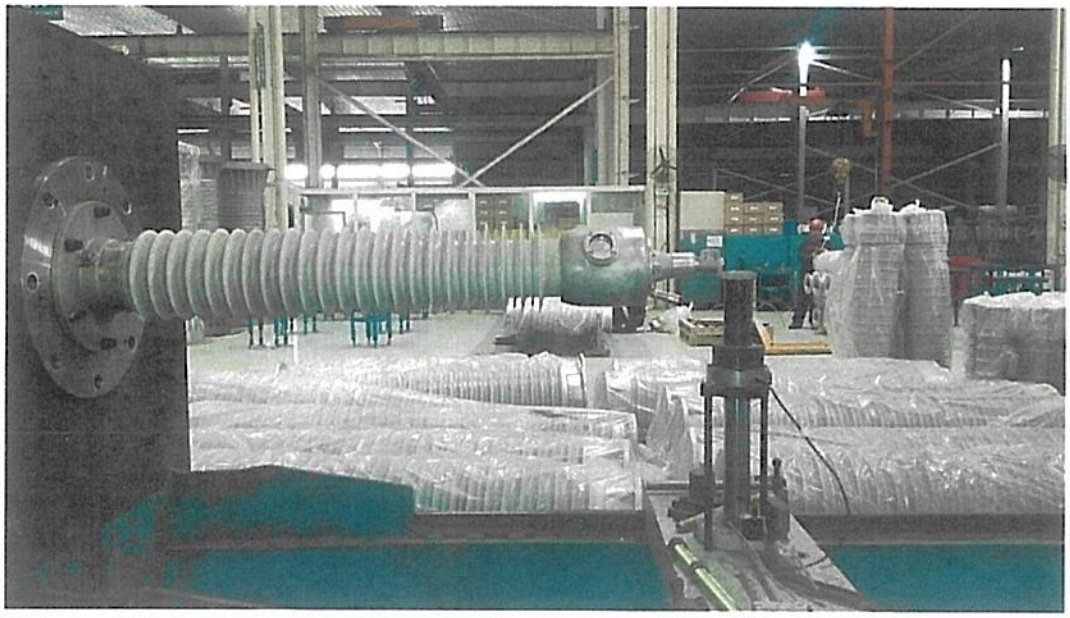

套管试验整体

悬臂负荷耐受试验（型式）
Cantilever Load Withstand Test (Type Test)

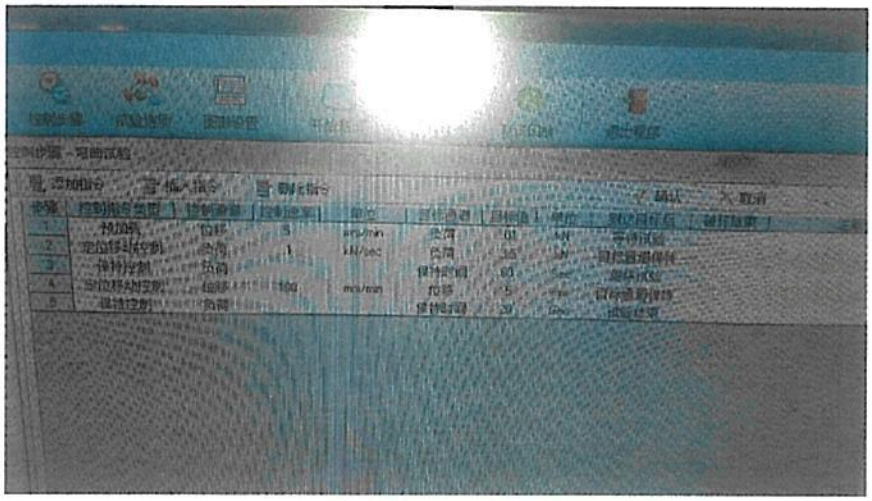

力值

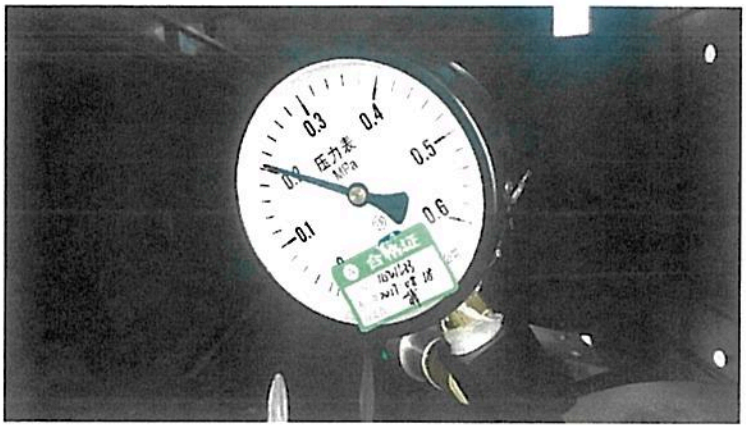

表压

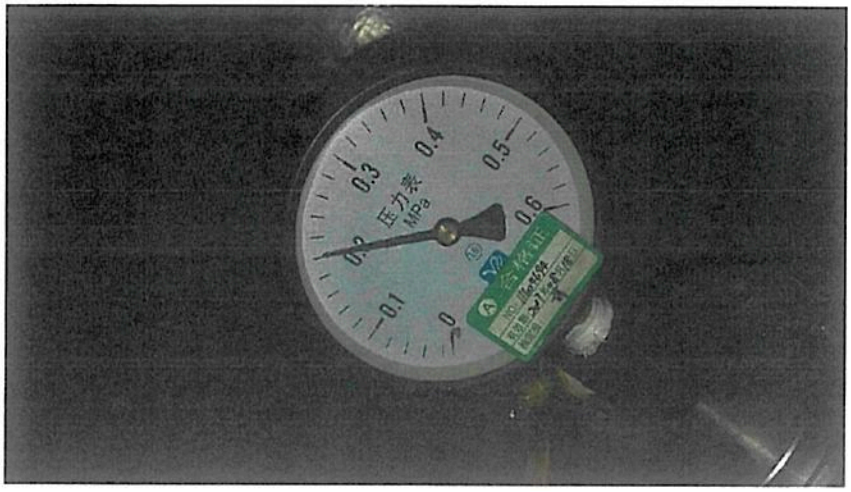

表压

介质损耗因数和电容量测量(悬臂负荷耐受试验后)
Measurement of Dielectric Dissipation Factor and Capacitance (After Cantilever Load Withstand Test)

介质损耗因数和电容量测量线路图

(Circuit diagram of measurement of dielectric dissipation factor and capacitance)

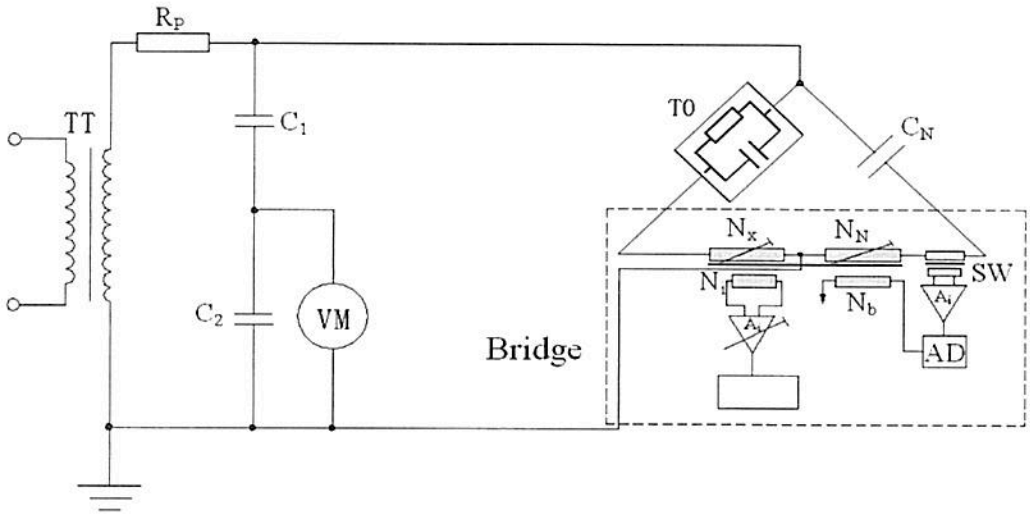

TT---工频试验变压器(PF transformer)

R_p---保护电阻(Protection resistance)

C_1---高压臂电容(H.V arm capacitance)

C_2---低压臂电容(L.V arm capacitance)

C_N---标准电容器(Standard capacitor)

TO---试品(Test object)

VM---数字测量仪(Voltmeter)

Bridge---测量电桥(Bridge)

试验所用设备主要参数

(Main parameters of testing equipment)

U/S(kV/kVA)	f_{TT}(Hz)	R_p(kΩ)	C_1(pF)	C_2(μF)
550/2200	50	2	500	2.12
扩展不确定度(Expanded uncertainty): U=2.4pC，(k=2)。				

介质损耗因数和电容量测量(悬臂负荷耐受试验后)
Measurement of Dielectric Dissipation Factor and Capacitance (After Cantilever Load Withstand Test)

试验日期/Date: 2017-03-09

t= 8.5℃， RH= 64%， P= 101.96kPa

试验分别在76kV、126kV下进行介质损耗因数和电容量测量。要求在76kV、126kV电压下tanδ最大值为0.4%，测量电压从76kV提高至126kV时，tanδ最大允许增值为0.1%，电容量规定值：255pF～275pF。

The dielectric dissipation factor and capacitance are measured on 76kV and 126kV. The allowed tanδ is 0.4% on all test voltages. When the test voltage raises from 76kV to 126kV, the increase of tanδ must be less tan 0.1%. Cx :255pF～275pF.

标准电容C_N=50.12pF。
Standard capacitor C_N=50.12pF.

样品编号 Specimen No.	测量电压 Voltage applied kV		Cx pF	tanδ %	△tanδ %
	应施电压 Expected voltage	实施电压 Measured voltage			
1	76	76.3	269.4	0.298	/
	126	126.5	269.4	0.295	0.003

符合检验依据规定，合格。
The result met test standard and the technical specifications.

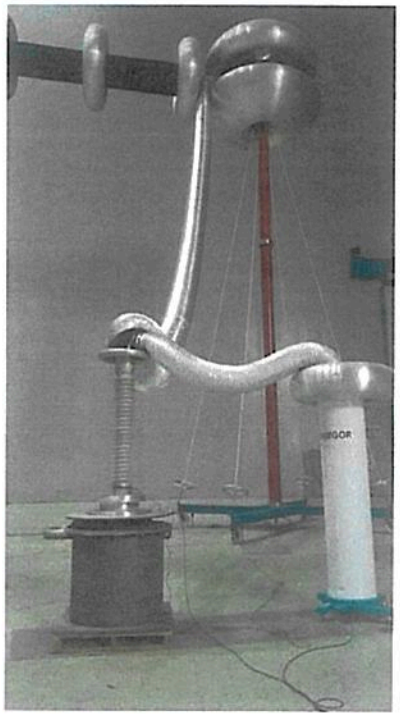

DLCZP170065J-005

工频干耐受电压试验(悬臂负荷耐受试验后)
Dry Power-frequency Voltage Withstand Test (After Cantilever Load Withstand Test)

工频试验原理接线图
(Diagram of power frequency voltage circuit)

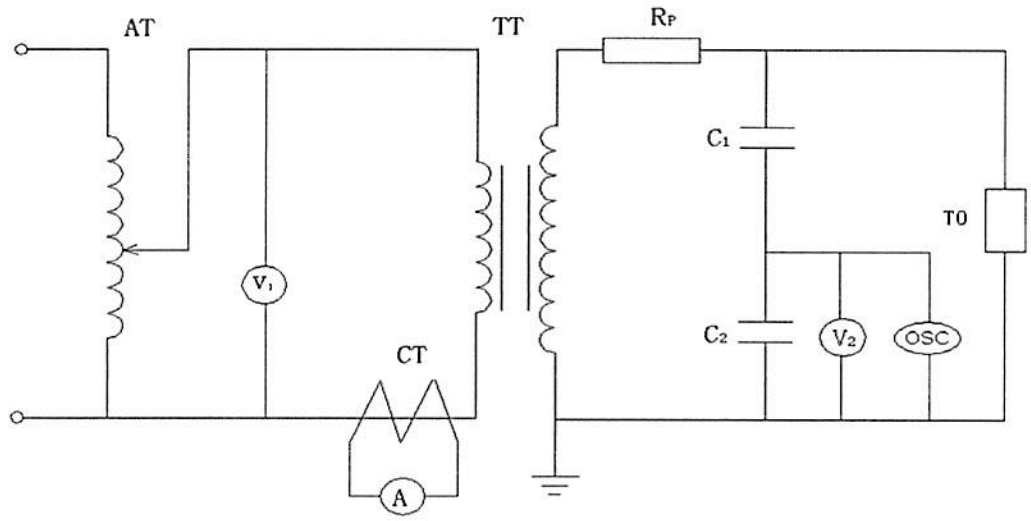

AT——调压器(Regulator)

R_p——保护电阻(Protection resistance)

CT——电流互感器(Current transformer)

TT——工频试验变压器(PF transformer)

TO——试品(Test object)

A——电流表(Current meter)

C_1——高压臂电容(H.V arm capacitance)

C_2——低压臂电容(L.V arm capacitance)

V_2——数字电压表(Voltmeter)

OSC——数字示波器(Oscilloscope)

试验所用设备主要参数

(Main parameters of testing equipment)

U/S(kV/kVA)	f_{TT}(Hz)	R_p(kΩ)	C_1(pF)	C_2(μF)
2250/2250	50	30	300	3.0
扩展不确定度(Expanded uncertainty): U<2%，(k=2)。				

工频干耐受电压试验(悬臂负荷耐受试验后)
Dry Power-frequency Voltage Withstand Test (After Cantilever Load Withstand Test)

试验日期/Date: 2017-03-09

t=8.5℃， RH= 64%， P= 101.9kPa

规定值/Specifications: 255kV. 电压校正系数/Correction coefficient K_t= 0.990

实际试验时取K_t=1.000
Choosing K_t=1.000 during test

样品编号 No.	应该施加电压值 Expected voltage value kV	实际施加电压值 Measured voltage kV	耐受时间 Duration s	样品状况 Result
1	255	255.6	60	未闪络 No flashover
规定值 Specifications	/	/	60	不应闪络 No flashover

符合检验依据规定，合格。
The result met test standard and the technical specifications.

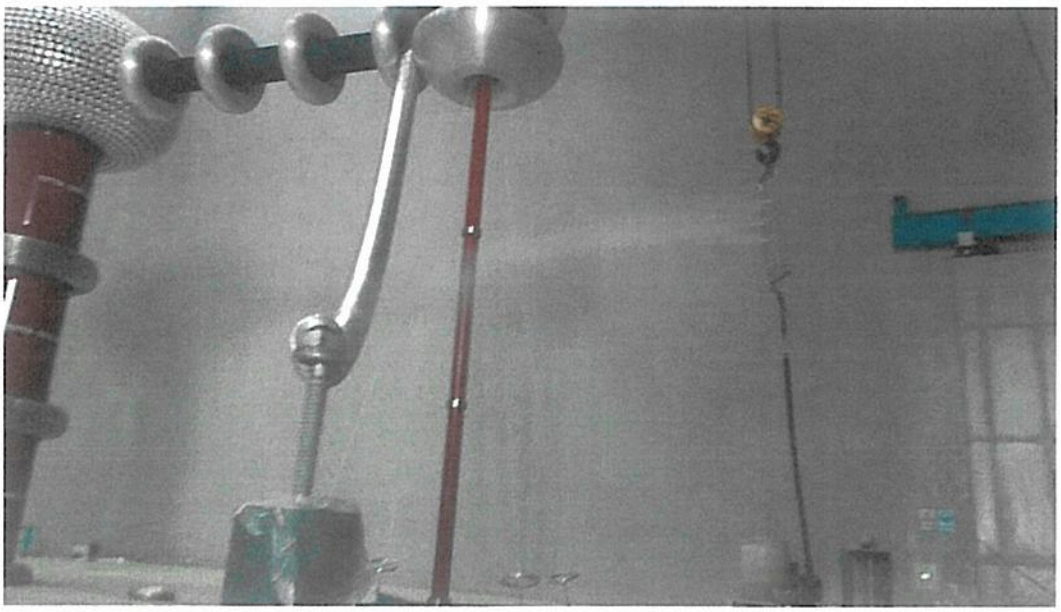

PFVZP170065J-004

局部放电测量(悬臂负荷耐受试验后)
Partial Discharge Measurement (After Cantilever Load Withstand Test)

局部放电量测量线路图（AC）
(Circuit diagram of partial discharge measurement, AC)

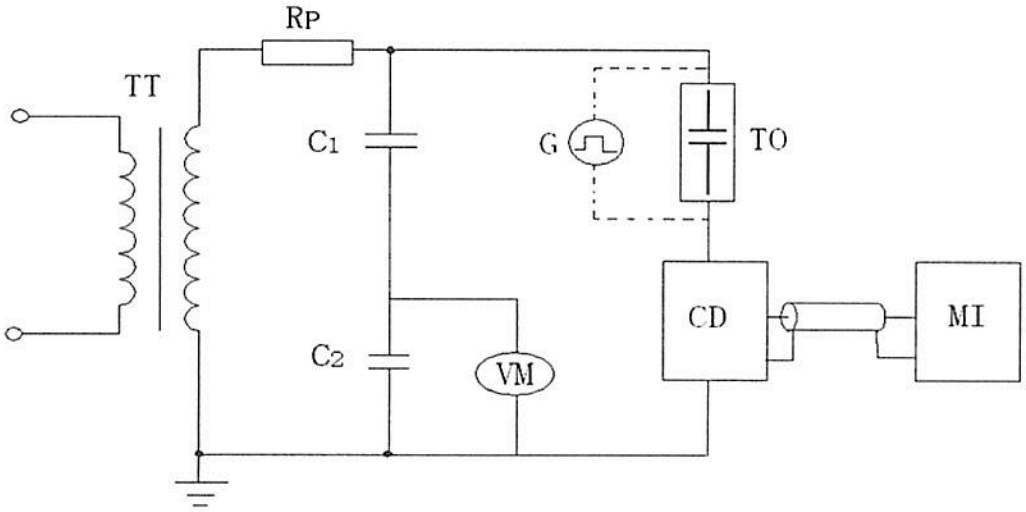

TT---工频试验变压器(PF transformer)

R_p---保护电阻(Protect resistor)

C_1---高压臂电容(H.V arm capacitor)

C_2---低压臂电容(L.V arm capacitor)

CD---耦合装置(Coupling device)

TO---试品(Test object)

VM---数字电压表(Voltmeter)

G---方波校准器(Step voltage generator)

MI---局放测量仪(Measuring instrument)

试验所用设备主要参数

(Main parameters of testing equipment)

U/S(kV/kVA)	f_{TT}(Hz)	R_p(kΩ)	C_1(pF)	C_2(μF)
550/2200	50	2	500	2.12
扩展不确定度(Expanded uncertainty): U=2.4pC，(k=2)。				

局部放电测量(悬臂负荷耐受试验后)
Partial Discharge Measurement (After Cantilever Load Withstand Test)

试验日期/Date: 2017-03-09

t= 8.5℃， RH= 64%， P= 101.9kPa

试验前采用5pC校准源对回路进行校准，背景噪音为≤2.5pC。
Step voltage generator: 5pC. Background noise ≤2.5pC.

预加电压为255kV，持续1min，在126kV、110kV和80kV的测量电压下进行局部放电测量，要求的局部放电量126kV、110kV和80kV下最大值为5pC。
The applied voltage is 255kV for 1 min. Partial discharge is measured on 126kV, 110kV and 80kV. and allowed partial discharge is 5pC max..

样品编号 Specimen No.	实施电压 Voltage applied kV	持续时间 Duration min	局部放电量 Partial discharge pC
1	126.4	5	≤3.6
	110.2	5	≤3.6
	80.6	5	≤3.6

符合检验依据规定，合格。
The result met test standard and the technical specifications.

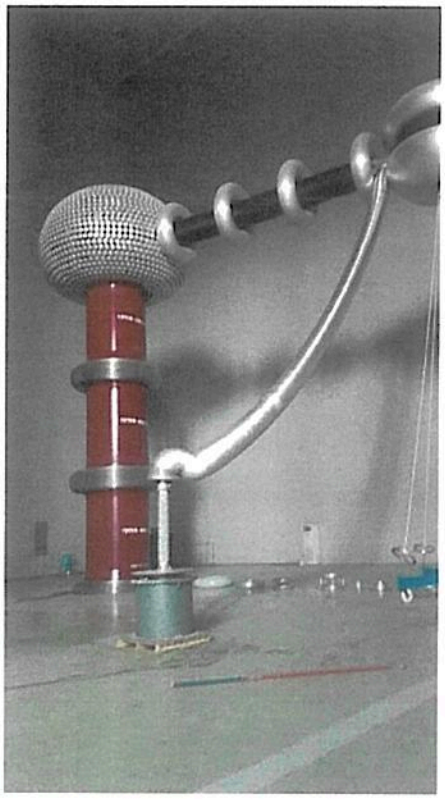

PDZP170065J-007

介质损耗因数和电容量测量(悬臂负荷耐受试验后)
Measurement of Dielectric Dissipation Factor and Capacitance (After Cantilever Load Withstand Test)

介质损耗因数和电容量测量线路图
(Circuit diagram of measurement of dielectric dissipation factor and capacitance)

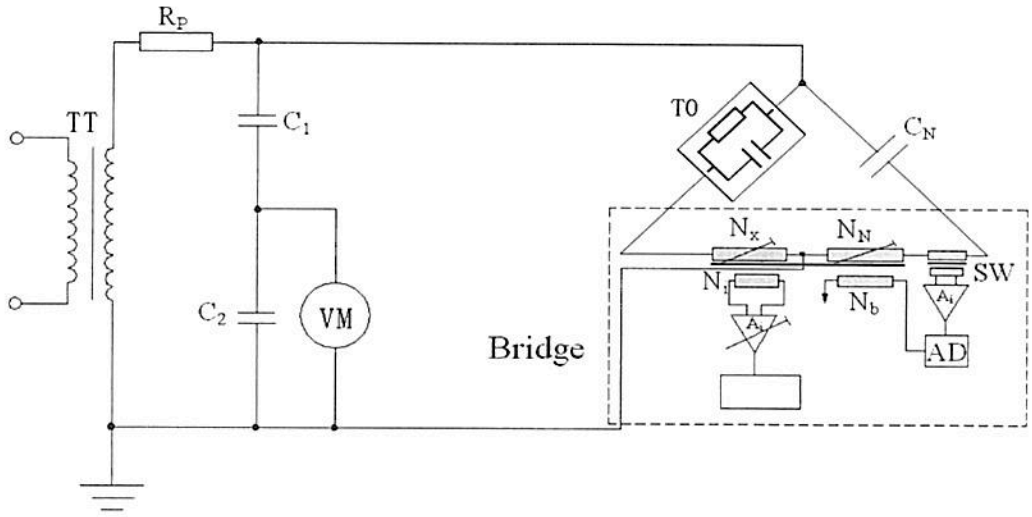

TT---工频试验变压器(PF transformer)

R_p---保护电阻(Protection resistance)

C_1---高压臂电容(H.V arm capacitance)

C_2---低压臂电容(L.V arm capacitance)

C_N---标准电容器(Standard capacitor)

TO---试品(Test object)

VM---数字测量仪(Voltmeter)

Bridge---测量电桥(Bridge)

试验所用设备主要参数

(Main parameters of testing equipment)

U/S(kV/kVA)	f_{TT}(Hz)	R_p(kΩ)	C_1(pF)	C_2(μF)
550/2200	50	2	500	2.12
扩展不确定度(Expanded uncertainty): U=2.4pC，(k=2)。				

介质损耗因数和电容量测量(悬臂负荷耐受试验后)
Measurement of Dielectric Dissipation Factor and Capacitance (After Cantilever Load Withstand Test)

试验日期/Date: 2017-03-09

t= 8.5℃， RH= 64%， P= 101.9kPa

试验分别在76kV、126kV下进行介质损耗因数和电容量测量。要求在76kV、126kV电压下tanδ最大值为0.4%，测量电压从76kV提高至126kV时，tanδ最大允许增值为0.1%，电容量规定值：255pF～275pF。

The dielectric dissipation factor and capacitance are measured on 76kV and 126kV. The allowed tanδ is 0.4% on all test voltages. When the test voltage raises from 76kV to 126kV, the increase of tanδ must be less tan 0.1%. Cx :255pF～275pF.

标准电容C_N=50.12pF。
Standard capacitor C_N=50.12pF.

样品编号 Specimen No.	测量电压 Voltage applied kV		Cx pF	tanδ %	△tanδ %
	应施电压 Expected voltage	实施电压 Measured voltage			
1	76	76.7	269.4	0.294	/
	126	126.8	269.3	0.296	0.002

符合检验依据规定，合格。
The result met test standard and the technical specifications.

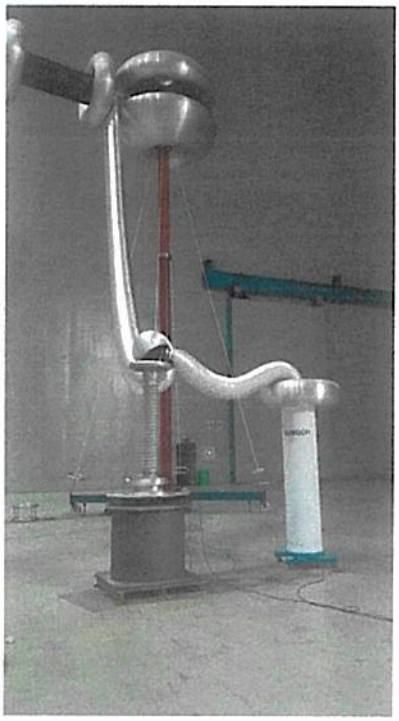

抽头绝缘试验(悬臂负荷耐受试验后)
Tests of Tap Insulation (After Cantilever Load Withstand Test)

试验日期/Date: 2017-03-09

1 对地耐压试验/The ground pressure test

P=101.9kPa t=8.5℃ RH=64%

样品编号 Specimen No.	实施电压 Voltage applied kV	持续时间 Duration min	样品状况 Result
1	2	1	未闪络、未击穿 No flashover、No puncture
规定值 Specifications	2	1	未闪络、未击穿 No flashover or puncture

符合检验依据规定，合格。
The result meets test standard and the technical specifications.

2 介质损耗因数和电容量测量/Measurement of dielectric dissipation factor and capacitance

2.1 试验要求/The test requirement

试验在3kV电压下进行介质损耗因数和电容量测量，要求tanδ最大值为5%，电容量≤10000pF，对地绝缘≥1000MΩ。
Measure the dielectril loss factor and capacitance under the test voltage of 3kV. tanδ≤5%. Cx≤10000pF. grounding insulation ≥1000MΩ.

2.2 试验结果/The test result

样品编号 Specimen No.	实施电压 Voltage applied kV	Cx pF	tanδ %
1	3	223.5	0.802
规定值 Specifications	3	≤10000	≤5

符合检验依据规定，合格。
The result meets test standard and the technical specifications.

抽头绝缘试验(悬臂负荷耐受试验后)
Tests of Tap Insulation (After Cantilever Load Withstand Test)

TTIZP 170065J-004

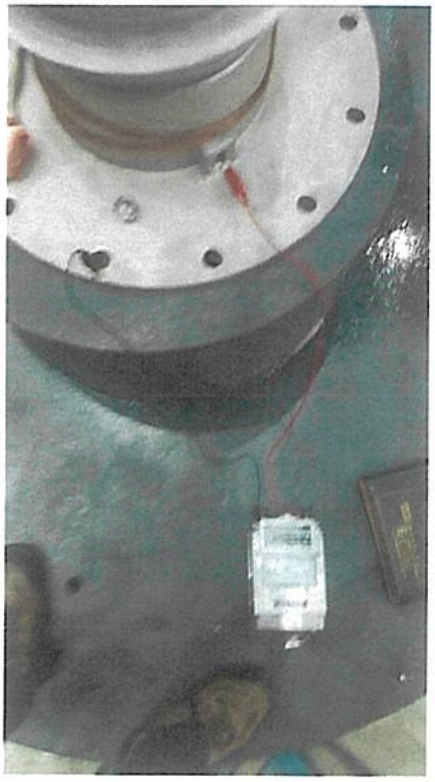

TTIZP 170065J-005

充液体、充混合物以及液体绝缘套管的密封试验(悬臂负荷耐受试验后)
Tightness Test on Liquid-filled, Compound-filled and Liquid-insulated Bushings (After Cantilever Load Withstand Test)

试验日期/Date: 2017-03-08

样品编号 Specimen No.	施加压力值 The pressure value MPa	持续时间 Duration h	试验温度 Test temperature ℃	样品状况 Result
1	0.20	12	75	无泄漏、未损坏 No leakage, no damage
规定值 Specifications	0.20	12	75	不应泄漏或损坏 No leakage or damage

符合检验依据规定，合格。
The result met test standard and the technical specifications.

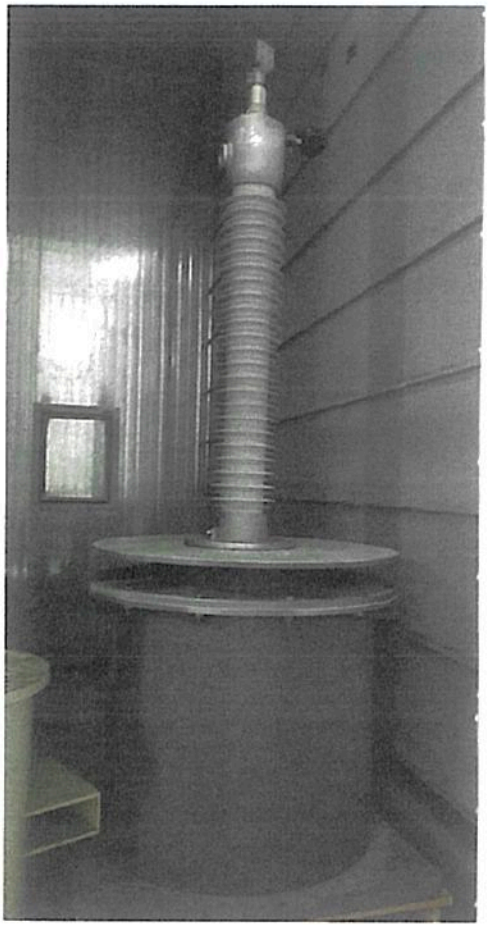

试验整体

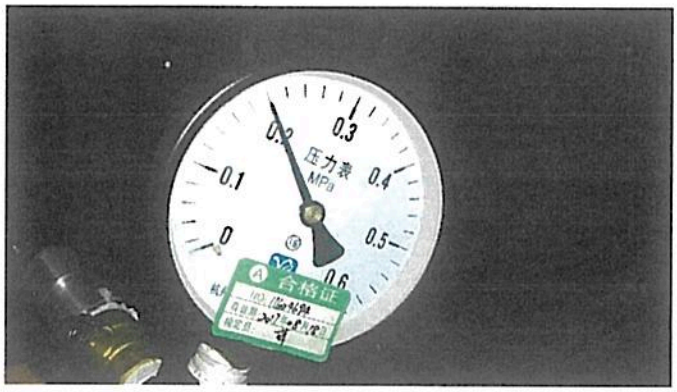

密封表压

法兰和其他固定装置的密封试验(悬臂负荷耐受试验后)
Tightness Test at the Flange or Other Fixing Device (After Cantilever Load Withstand Test)

试验日期/Date: 2017-03-08

样品编号 No.	施加压力值 The pressure value MPa	持续时间 Duration min	样品状况 Result
1	0.25	15	无泄漏、未损坏 No leakage, no damage
规定值 Specifications	0.25	15	不应泄漏或损坏 No leakage or damage

符合检验依据规定，合格。
The result met test standard and the technical specifications.

试验整体

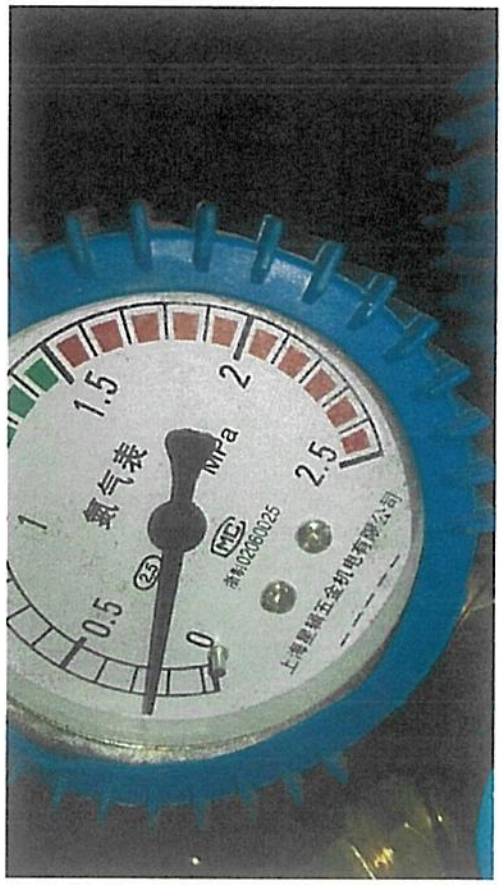

密封表压

外观检查和尺寸检查（悬臂负荷耐受试验后）
Visual Inspection and Dimensional Check (After Cantilever Load Withstand Test)

试验日期/Date: 2017-03-09

试品外观表面无缺陷，套管尺寸符合相关图纸，套管整体长度为2603mm，满足（2600±10）mm；油中端长度为808mm，满足（808±5）mm；爬电距离为4099mm，满足＞3906mm。符合检验依据规定，合格。

The outside surface has no vice, the dimension of bushing conforms to the drawing. the total length is 2603mm, met the requirement of （2600±10）mm. the length of oil side is 808mm, met the requirement of （808±5）mm. creepage distance is 4099mm. met the requirement of more than 3906mm.The result met test standard and the technical specifications.

充液体、充混合物以及液体绝缘套管的密封试验(型式)
Tightness Test on Liquid-filled, Compound-filled and Liquid-insulated Bushings (Type Test)

试验日期/Date: 2017-03-08

样品编号 Specimen No.	施加压力值 The pressure value MPa	持续时间 Duration h	试验温度 Test temperature ℃	样品状况 Result
1	0.20	12	75	无泄漏、未损坏 No leakage, no damage
规定值 Specifications	0.20	12	75	不应泄漏或损坏 No leakage or damage

符合检验依据规定，合格。
The result met test standard and the technical specifications.

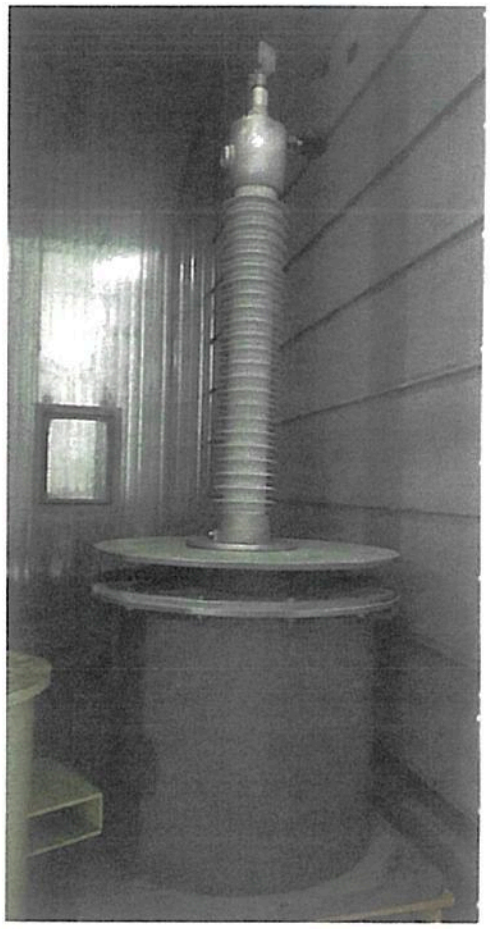

试验整体

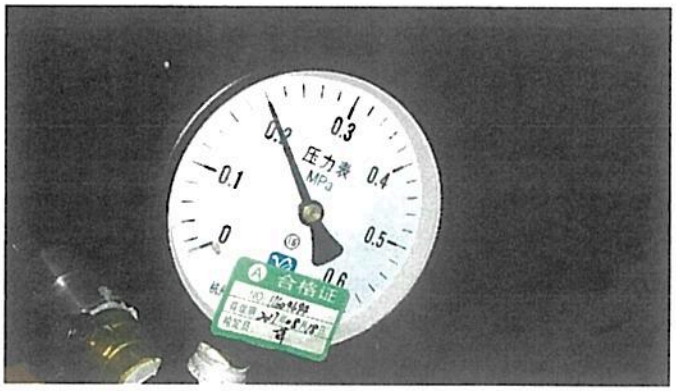

密封表压

尺寸检查（型式）
Dimensional Check (Type Test)

试验日期/Date: 2017-03-07

试品外观表面无缺陷，套管尺寸符合相关图纸，套管整体长度为2603mm，满足（2600±10）mm；油中端长度为808mm，满足（808±5）mm；爬电距离为4099mm，满足＞3906mm。符合检验依据规定，合格。

The outside surface has no vice, the dimension of bushing conforms to the drawing. the total length is 2603mm, met the requirement of （2600±10）mm. the length of oil side is 808mm, met the requirement of （808±5）mm. creepage distance is 4099mm. met the requirement of more than 3906mm.The result met test standard and the technical specifications.

局部放电测量(型式)
Partial Discharge Measurement (Type Test)

局部放电量测量线路图（AC）
(Circuit diagram of partial discharge measurement, AC)

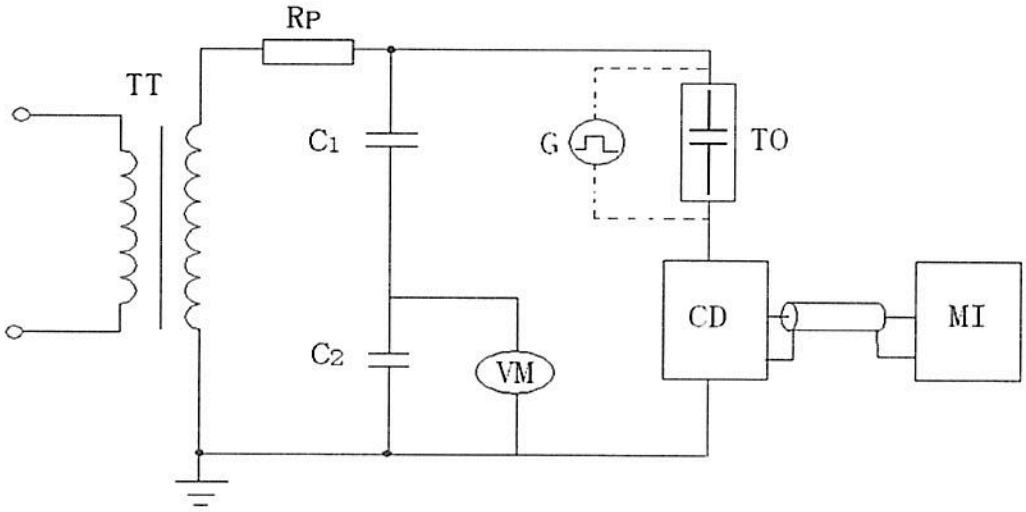

TT---工频试验变压器(PF transformer)

R_p---保护电阻(Protection resistance)

C_1---高压臂电容(H.V arm capacitor)

C_2---低压臂电容(L.V arm capacitor)

CD---耦合装置(Coupling device)

TO---试品(Test object)

VM---数字电压表(Voltmeter)

G---方波校准器(Step voltage generator)

MI---局放测量仪(Measuring instrument)

试验所用设备主要参数

(Main parameters of testing equipment)

U/S(kV/kVA)	f_{TT}(Hz)	R_p(kΩ)	C_1(pF)	C_2(μF)
550/2200	50	2	500	2.12
扩展不确定度(Expanded uncertainty): U=2.4pC，(k=2)。				

局部放电测量(型式)
Partial Discharge Measurement (Type Test)

试验日期/Date: 2017-03-09

t= 8.5℃， RH= 64%， P= 101.9kPa

试验前采用5pC校准源对回路进行校准，背景噪音为≤2.5pC。
Step voltage generator: 5pC. Background noise ≤2.5pC.

预加电压为255kV，持续1min，在126kV、110kV和80kV的测量电压下进行局部放电测量，要求的局部放电量126kV、110kV和80kV下最大值为5pC。
The applied voltage is 255kV for 1 min. Partial discharge is measured on 126kV, 110kV and 80kV. and allowed partial discharge is 5pC max..

样品编号 Specimen No.	实施电压 Voltage applied kV	持续时间 Duration min	局部放电量 Partial discharge pC
1	126.1	5	≤3.8
	110.2	5	≤3.6
	80.3	5	≤3.6

符合检验依据规定，合格。
The result met test standard and the technical specifications.

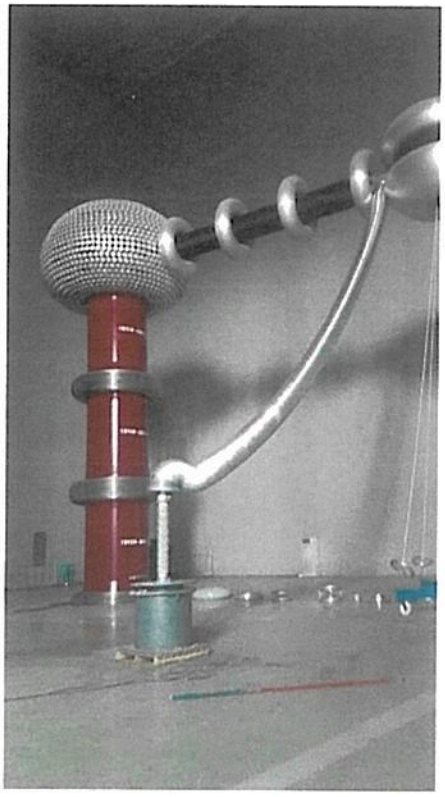

PDZP170065J-010

介质损耗因数和电容量测量(型式)
Measurement of Dielectric Dissipation Factor and Capacitance (Type Test)

介质损耗因数和电容量测量线路图
(Circuit diagram of measurement of dielectric dissipation factor and capacitance)

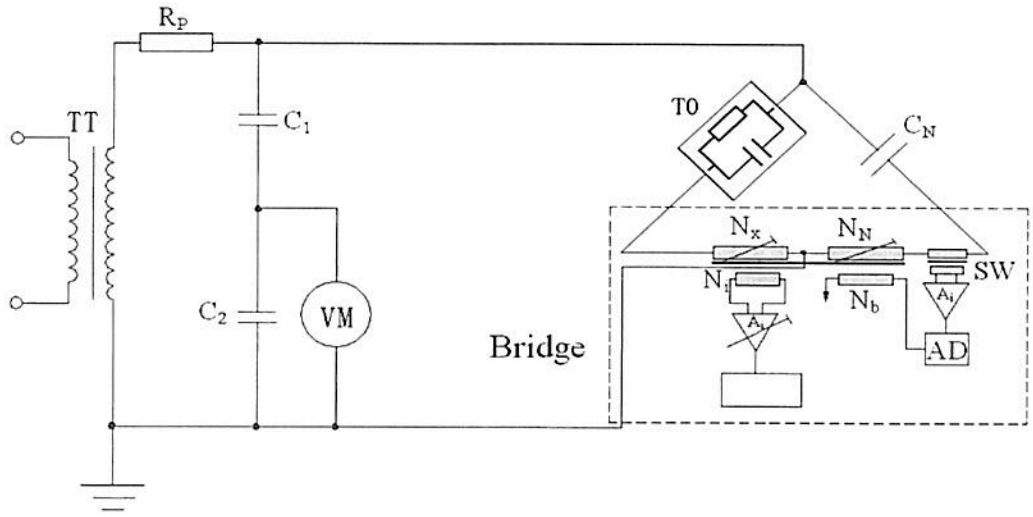

TT---工频试验变压器(PF transformer)

R_p---保护电阻(Protect resistor)

C_1---高压臂电容(H.V arm capacitance)

C_2---低压臂电容(L.V arm capacitance)

C_N---标准电容器(Standard capacitor)

TO---试品(Test object)

VM---数字测量仪(Voltmeter)

Bridge---测量电桥(Bridge)

试验所用设备主要参数

(Main parameters of testing equipment)

U/S(kV/kVA)	f_{TT}(Hz)	R_p(kΩ)	C_1(pF)	C_2(μF)
550/2200	50	2	500	2.12
扩展不确定度(Expanded uncertainty): U=2.4pC，(k=2)。				

介质损耗因数和电容量测量(型式)
Measurement of Dielectric Dissipation Factor and Capacitance (Type Test)

试验日期/Date: 2017-03-07

t= 8.5℃， RH= 64%， P= 101.9kPa

试验分别在76kV、126kV下进行介质损耗因数和电容量测量。要求在76kV、126kV电压下tanδ最大值为0.4%，测量电压从76kV提高至126kV时，tanδ最大允许增值为0.1%，电容量规定值：255pF～275pF。

The dielectric dissipation factor and capacitance are measured on 76kV and 126kV. The allowed tanδ is 0.4% on all test voltages. When the test voltage raises from 76kV to 126kV, the increase of tanδ must be less tan 0.1%. Cx :255pF～275pF.

标准电容C_N=50.12pF。
Standard capacitor C_N=50.12pF.

样品编号 Specimen No.	测量电压 Voltage applied kV		Cx pF	tanδ %	△tanδ %
	应施电压 Expected voltage	实施电压 Measured voltage			
1	76	76.7	269.7	0.295	/
	126	126.1	269.7	0.293	0.002

符合检验依据规定，合格。
The result met test standard and the technical specifications.

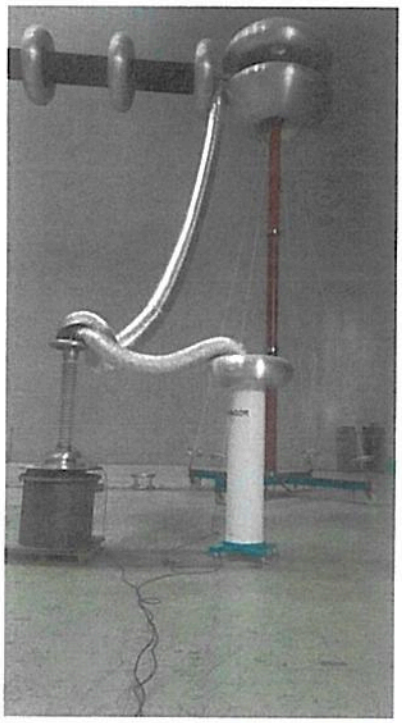

DLCZP170065J-007

附录
Appendix

1 确认的试品图纸/Drawing

0SM.132.322.1

2 试品照片 / Photographs

(/)

附录
Appendix
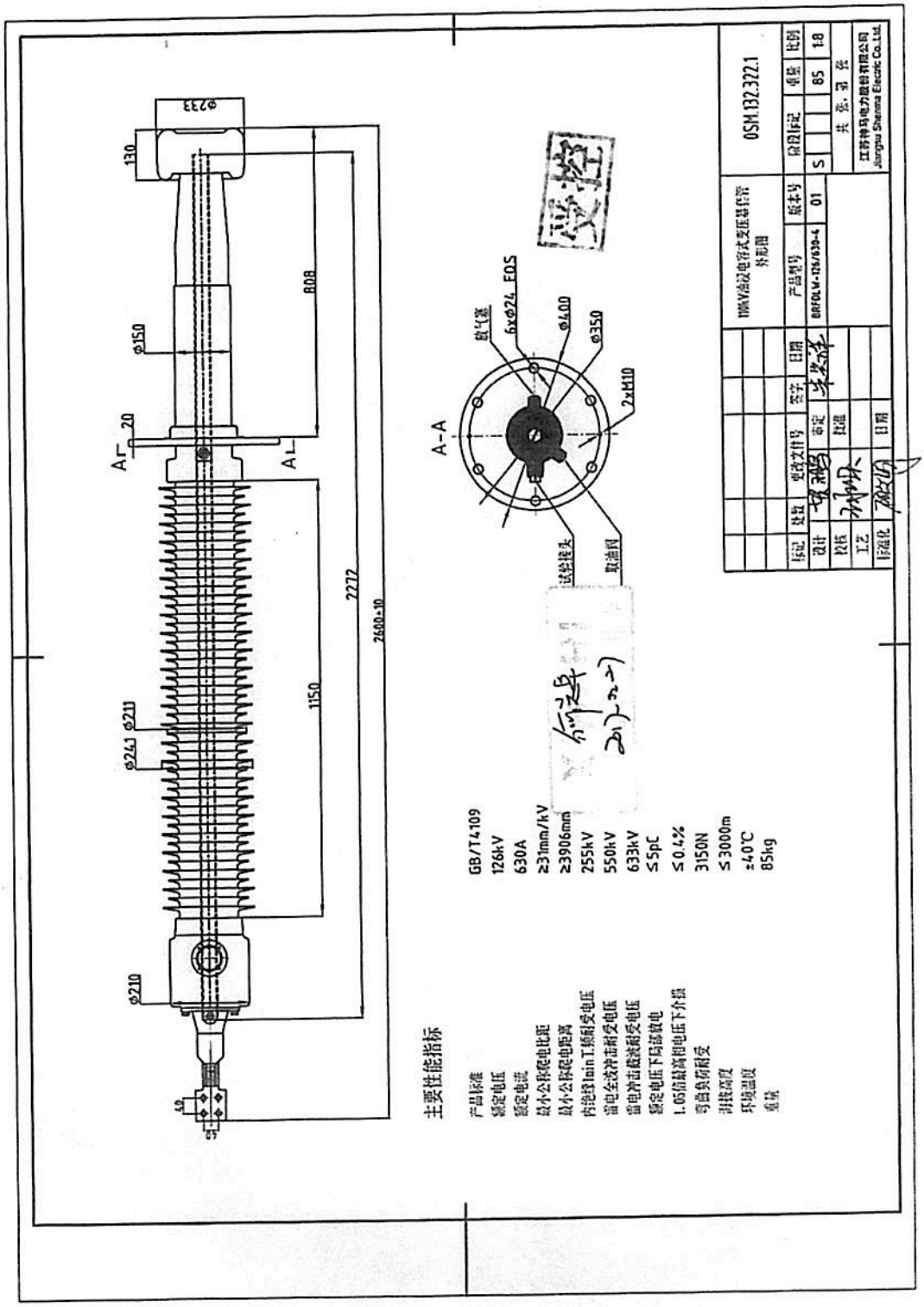
1 确认的试品图纸/Drawing